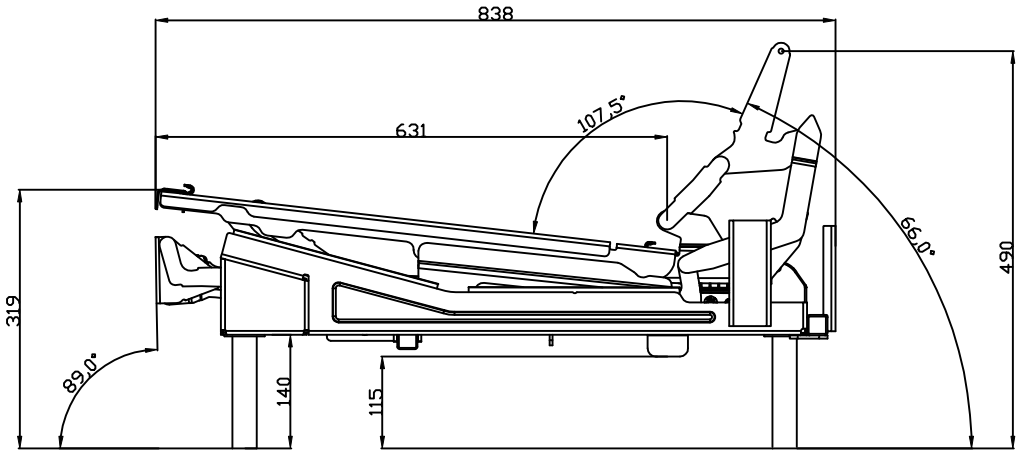
838
631
107.5°
66.0°
490
319
89.0°
140
115

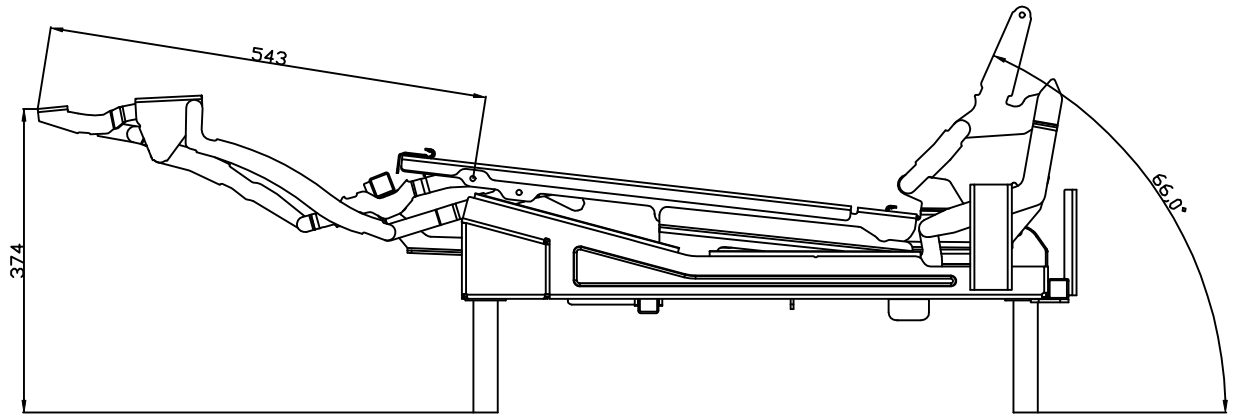
543
66.0°
374

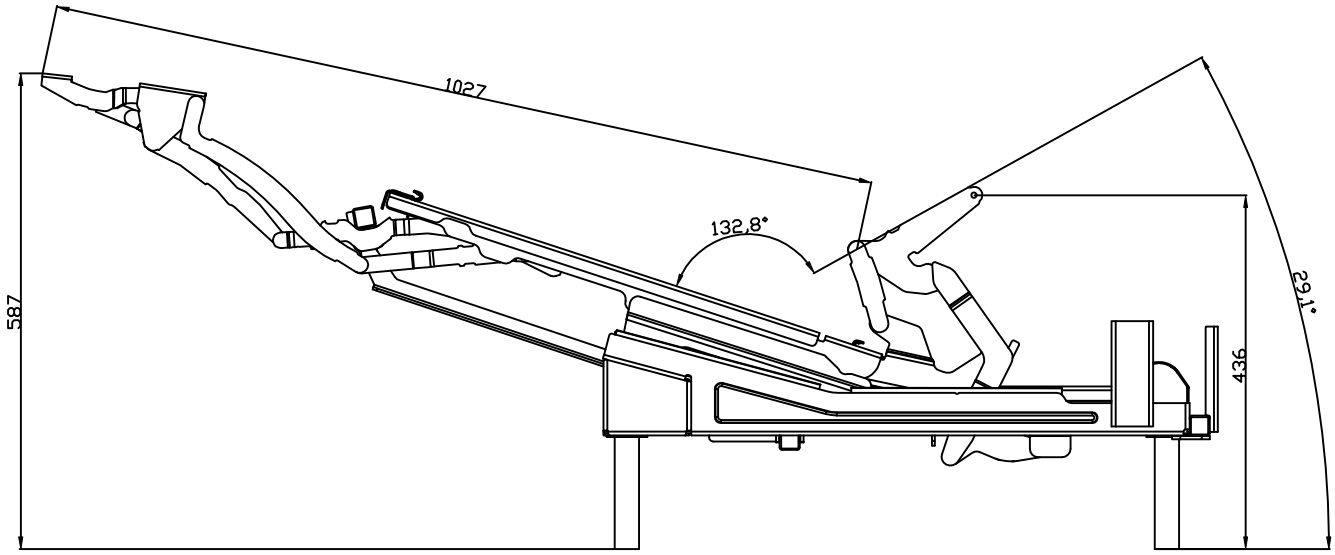
1027
132.8°
291°
587
436