28720铁架装配流程图

28720 Mechanism Assemble Instruction

第一步 Step 1

外六角螺栓1/4"*38

Hexagon bolt 1/4"*38

前驱动方管组件

Front driving square tube

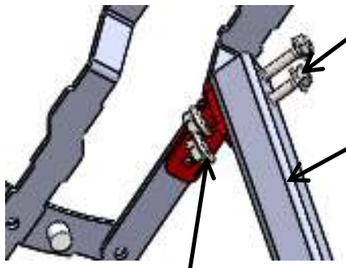

防滑螺母1/4"

Antislip nut 1/4"

第三步 Step 3

自攻螺丝M7*13

Self-tapping screw M7*13

双电机驱动方管组件

Dual motor driving square tube

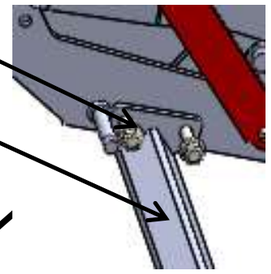

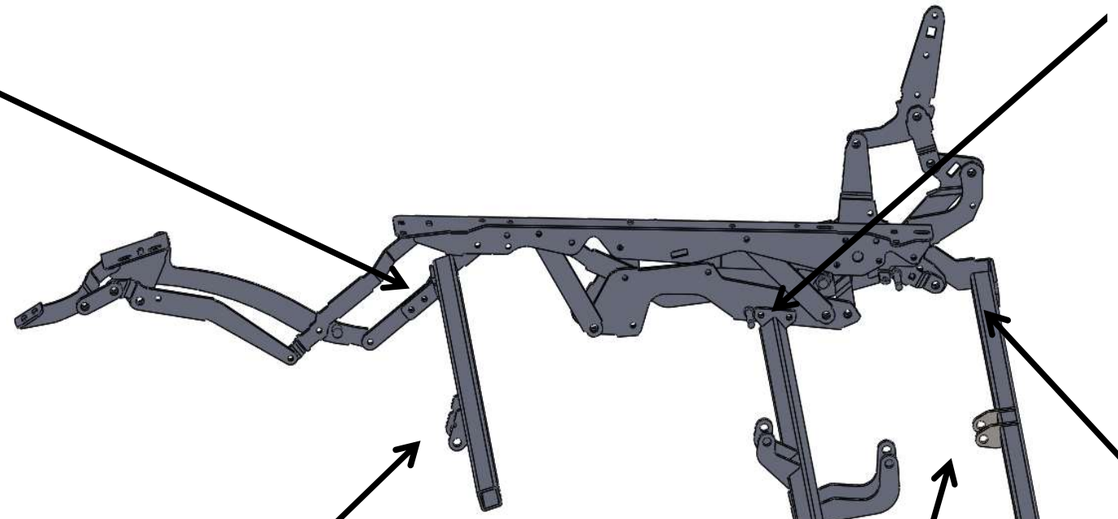

第二步 Step 2

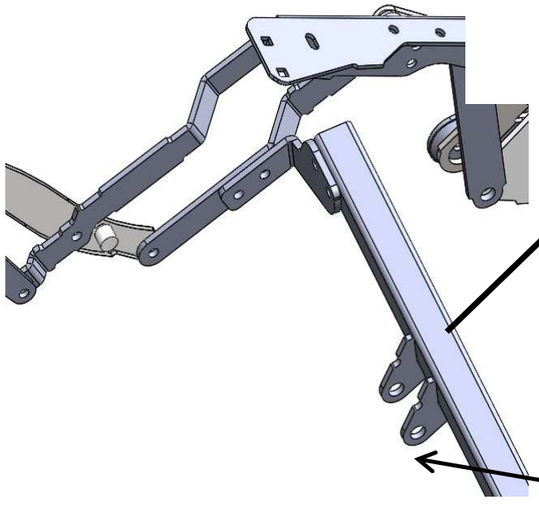

注意：安装时请注意前驱动方管组件的方向，识别孔向前。

Attention: please mind the direction of the front driving square tube when assembling, identification hole facing the front.

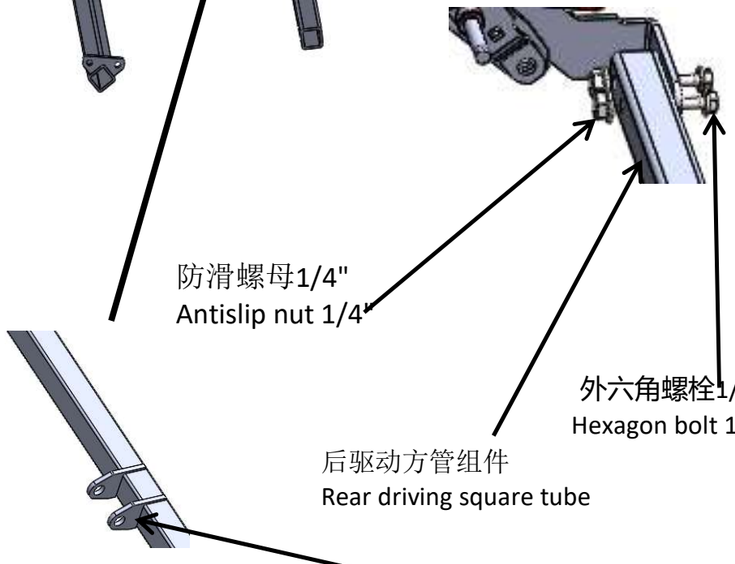

防滑螺母1/4"

Antislip nut 1/4"

外六角螺栓1/4"*38

Hexagon bolt 1/4"*38

后驱动方管组件

Rear driving square tube

注意：安装时请注意后驱动方管组件的方向。

Attention: please mind the direction of the rear driving square tube when assembling.

装配注意事项

Points for attention

1、根据《铁架装配工作指导书》做好装配前的准备工作；Make preparation before assembling according to *Work Instruction of Mechanism Assembly*

2、请按图示装配顺序进行装配，第一步、第二步、第三步装配孔位参考图示对准；上述均为左右对称装配。Please assemble according to the instruction, align the hole positions. The left and right parts are symmetrical.

3、装配时，注意控制力度，防止用力过度出现滑牙等现象；装配完成后，需对螺丝头部、尾部以及铁架上面掉漆的地方进行补漆处理。Please control the power, for overexertion will make the screw loose; if the paint is removed on the end of the screw and mechanism, please make it up.

4、装配物料详见28720装配清单。For the detail of the components, please check 28720 assembly list.